SPECIFICATION

Customer Part Number: …
Tianma Part Number: TM104SDHG30-71
Product Description: 10.4” 800xRGBx600 TFT-LCD Module

[ ] Target Specification
[ ] Preliminary Specification
[◉] Final Specification

Customer		Industrial Product Dept, PDBU Tianma Microelectronics Co., Ltd	
Signatures	Date	Approved By	Date
		Jinquan.Liu	2021-8-3
		Reviewed By	
		Longping.Deng	2021-8-3
		Prepared By	
		Gang.Li	2021-6-24
Comments:			

* This cover page is for your Comments and Signatures back to TIANMA.

 ALL RIGHT RESERVED

REVISION HISTORY

Rev	Date	Page	Revision Items	Editor
1.0	2021-06-24	-	Preliminary SPEC released.	Gang.Li
2.0	2021-08-03	-	Final SPEC released.	Gang.Li
2.1	2021-03-30	20，21	Update mechanical drawing and packing.	Gang.Li

CONTENTS

1. SUMMARY 1
2. GENERAL SPECIFICATION 2
3. INPUT / OUTPUT TERMINALS 3
3.1 CN1 Pin assignment (LCD Interface) 3
3.2 CN2 Pin assignment (BL Interface) 4
4. ABSOLUTE MAXIMUM RATINGS 5
5. ELECTRICAL CHARACTERISTICS 6
5.1 DC Characteristics for Panel Driving 6
5.2 DC Characteristics for Backlight Driving 7
5.3 Recommended Power ON/OFF Sequence 8
5.4 LCD Module Block Diagram 9
6. INTERFACE TIMING CHARACTERISTICS 10
6.1 AC characteristics 10
6.2 Data input timing table 11
6.3 Data input timing diagram 12
7. OPTICAL CHARACTERISTICS 13
8. RELIABILITY TEST 16
9. MECHANICAL DRAWING 17
10. PACKING INSTRUCTION 18
11. PRECAUTIONS FOR USE OF LCD MODULES 19

1. Summary

1.1 Summary

This is a 10.4 inch Amorphous-TFT-LCD (Thin Film Transistor Liquid Crystal Display) module with Normally White technology. This product is designed for industrial applications.

1.2 Features

- 30Khrs LED life time
- Without LED driver
- RGB888 TTL interface
- FPC pin out
- Anti- glare surface treatment
- Compliant with the European RoHS Directive (2011/65/EU) and Delegated Directive (2015/863/EU, Amending Annex II of 2011/65/EU)

2. General Specification

Feature		Spec
Display Spec.	Size	10.4 inch
	Resolution	800(RGB)x600
	Pixel Pitch (mm)	0.264x0.264
	Technology Type	a-Si
	Pixel Configuration	R.G.B Vertical Stripe
	Display Mode	TN, Normally White
	Surface Treatment	Anti-Glare
	Viewing Direction	12 o'clock
	Gray Scale Inversion Direction	6 o'clock
Mechanical Characteristics	LCM (W x H x D) (mm)	228.40x175.40x6.20
	Active Area(mm)	211.20x158.40
	Weight (g)	360
	Matching Connection Type CN1	FH28-60S-0.5SH(Hirose)
	Matching Connection Type CN2	BHSR-02VS-1
Optics	Luminance(nits)	350
	Contrast ratio	500
	NTSC	50%
	Viewing Direction	12 o'clock
	Gray Scale Inversion Direction	6 o'clock
	Viewing angle(U/D/L/R)	60/70/70/70(TN)
Electrical Characteristics	Interface	TTL(RGB888)
	Color Depth	262K/16.2M
	Power consumption	LCD:435mW(Black pattern) Backlinght:2304mW
	Power supply voltage	LCD panel: -- LED :240mA/9.6V

Table 2.1 General TFT Specifications

Note 1: For TN LCM: Viewing direction for best image quality is different from TFT definition. There is a 180 degree shift.

Note 2: LCM weight tolerance: ± 5%

3. Input / Output Terminals

3.1 CN1 Pin assignment (LCD Interface)

Matching connector type: **FH28-60S-0.5SH(Hirose)**

Pin	Symbol	I/O	Description	Remark
1	GND	P	Power Ground	
2	AVDD	P	Power Supply	
3	VCC	P	Power Supply	
4	R0	I	Red data Input(LSB)	
5	R1	I	Red data Input	
6	R2	I	Red data Input	
7	R3	I	Red data Input	
8	R4	I	Red data Input	
9	R5	I	Red data Input	
10	R6	I	Red data Input	
11	R7	I	Red data Input(MSB)	
12	G0	I	Green data Input(LSB)	
13	G1	I	Green data Input	
14	G2	I	Green data Input	
15	G3	I	Green data Input	
16	G4	I	Green data Input	
17	G5	I	Green data Input	
18	G6	I	Green data Input	
19	G7	I	Green data Input(MSB)	
20	B0	I	Blue data Input(LSB)	
21	B1	I	Blue data Input	
22	B2	I	Blue data Input	
23	B3	I	Blue data Input	
24	B4	I	Blue data Input	
25	B5	I	Blue data Input	
26	B6	I	Blue data Input	
27	B7	I	Blue data Input(MSB)	
28	DCLK	I	Clock input(Latch data at falling edge)	
29	DE	I	Data enable	
30	HSYNC	I	Horizontal sync input. Negative polarity	
31	VSYNC	I	Vertical sync input. Negative polarity	
32	MODE	I	DE/SYNC mode select .normally pull high H:DE mode .L:HV sync mode	
33	NC	-	No connection	
34	NC	-	No connection	
35	NC	-	No connection	
36	VCC	P	Power Supply	
37	NC	-	No connection	
38	GND	P	Power Ground	
39	GND	P	Power Ground	
40	AVDD	P	Power Supply	
41	VCOM		VCOM DC input	
42	DITH	I	Dithering setting DITH="H" 6bit resolution; DITH="L" 8bit resolution	
43	NC	-	No connection	
44	NC	-	No connection	
45	NC	-	No connection	

46	NC	-	No connection	
47	NC	-	No connection	
48	NC	-	No connection	
49	NC	-	No connection	
50	NC	-	No connection	
51	NC	-	No connection	
52	NC	-	No connection	
53	NC	-	No connection	
54	NC	-	No connection	
55	NC	-	No connection	
56	VGH	P	TFT turn on voltage	
57	VCC	P	Power Supply	
58	VGL	P	TFT turn off voltage	
59	GND	P	Power Ground	
60	NC	-	No connection	

Table 3.1 Pin Assignment for LCD Interface

I/O definition: I---Input, O---Output, P---Power/Ground, N---No connection

Note1: All of the GND pins should be connected to the system ground.

Note 1: This LCD module supports SYNC & SYNC-DE & DE mode, the pin setting is different from each other. Please refer to the descriptions.

3.2 CN2 Pin assignment (BL Interface)

Matching connector type: BHSR-02VS-1

No	Symbol	I/O	Description	Wire Color
1	LEDA	P	LED driving anode (high voltage)	**Red**
2	LEDK	P	LED driving cathode (low voltage)	White

Table 3.2 Pin Assignment for BL Interface

I/O definition: I---Input, O---Output, P---Power/Ground, N---No connection

4. Absolute Maximum Ratings

GND=0V

Item	Symbol	MIN	MAX	Unit	Remark
Power Voltage	VCC	-0.30	5.00	V	Maximum value due to MOS characteristics, user should set on advised value.
	AVDD	-0.30	15.00	V	
	VGH	-0.30	42.00	V	
	VGL	-20.00	0.30	V	
	VGH-VGL	-0.30	40.00	V	
Signal Input	Vin	-0.30	5.00	V	Note1
Operating Temperature	T_{op}	-20.0	70.0	℃	
Storage Temperature	T_{st}	-30.0	80.0	℃	
Operating and Storage Humidity	HSTG	-	90	%（RH）	Exceed 90%RH may cause abnormal display
Relative Humidity (Note2)	RH	--	≤90	%	Ta≤40℃
		--	≤85	%	40℃＜Ta≤50℃
		--	≤55	%	50℃＜Ta≤60℃
		--	≤36	%	60℃＜Ta≤70℃
		--	≤24	%	70℃＜Ta≤80℃
Absolute Humidity	AH	--	≤70	g/m³	Ta＞70℃

Table 4.1 Absolute Maximum Ratings

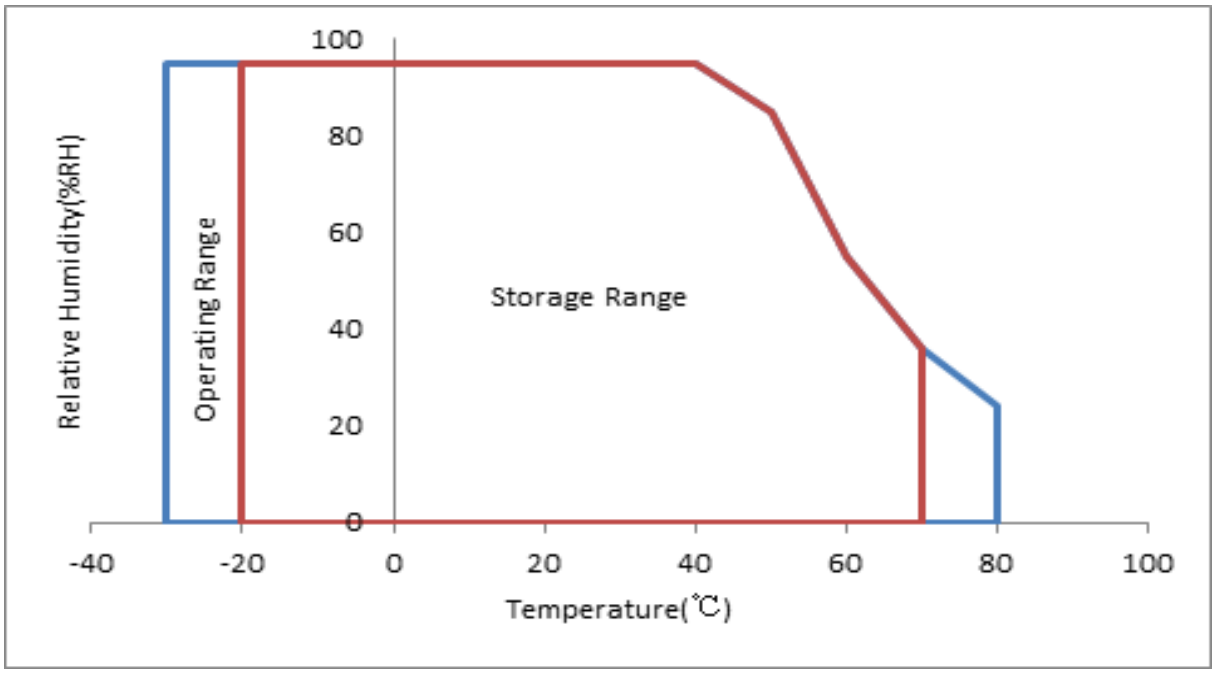

Table 4.2 Absolute Maximum Ratings chart

Note1: Input voltage include all in put data.

Note2: Ta means the ambient temperature.
It is necessary to limit the relative humidity to the specified temperature range.
Condensation on the module is not allowed.

Note3: The absolute maximum rating values of this product are not allowed to be exceeded at any times.
When exceeded the maximum ratings, the characteristics of the module may not be recovered, or in an extreme condition, the module may be permanently destroyed.

5. Electrical Characteristics

5.1 DC Characteristics for Panel Driving

GND=0V, Ta = 25℃

Item		Symbol	MIN	TYP	MAX	Unit	Remark
Digital supply Voltage		VCC	3.00	3.30	3.60	V	
Analog supply Voltage		AVDD	10.8	11	11.2	V	Very important voltage, exceed this value may cause abnormal display
Gate on voltage		VGH	24	25	26	V	
Gate off voltage		VGL	-7.5	-7.0	-6.5	V	
Common Electrode Driving Signal		VCOM	4.05	4.10	4.15	V	Very important voltage, exceed this value may cause abnormal display
Input Signal Voltage	Low Level	V_{IL}	0	-	0.3xVCC	V	R0~R7,G0~G7,0~B7,DE, DCLK,HSYNC,VSYNC,MODE, RESET, DITH
	High Level	V_{IH}	0.7xVCC	-	VCC	V	
Current of digital supply voltage		I_{VCC}	-	10.20	-	mA	VCC=3.3V,all white pattern
Current of analog supply voltage		I_{AVDD}	-	34.30	-	mA	AVDD=11V
Current of Gate on voltage		I_{VGH}	-	0.70	-	mA	VGH=25V
Current of Gate off voltage		I_{VGL}	-	0.70	-	mA	VGL=-7.0V
Current of Vcom		Ivcom		0.002	-	mA	VCOM=4.10V
Power consumption		P	-	435	-	mW	This value may vary with different patterns.

Table 5.1 DC Characteristics

Note1:To test the current dissipation, use “all Black Pattern”.

5.2 DC Characteristics for Backlight Driving

GND=0V, Ta = 25℃

Item	Symbol	Min	Typ	Max	Unit	Remark
Forward Current	I_F	-	240	360	mA	Note 1
Forward Current Voltage	V_F	9.0	9.6	9.9	V	Note 1
Backlight Power Consumption	WBL	-	2304	-	mW	Note 1
Operating Life Time	--	-	30000	-	hrs	Note 2

Table 5.2 LED Backlight Characteristics

Note1: I_F is defined for total LED(3S12P).

2: Optical performance should be evaluated at Ta=25℃ only.

3: If LED is driven by high current, high ambient temperature & humidity condition. The life time of LED will be reduced.

4:Operating life means brightness goes down to 50% of initial brightness. Typical operating life time is an estimated data.

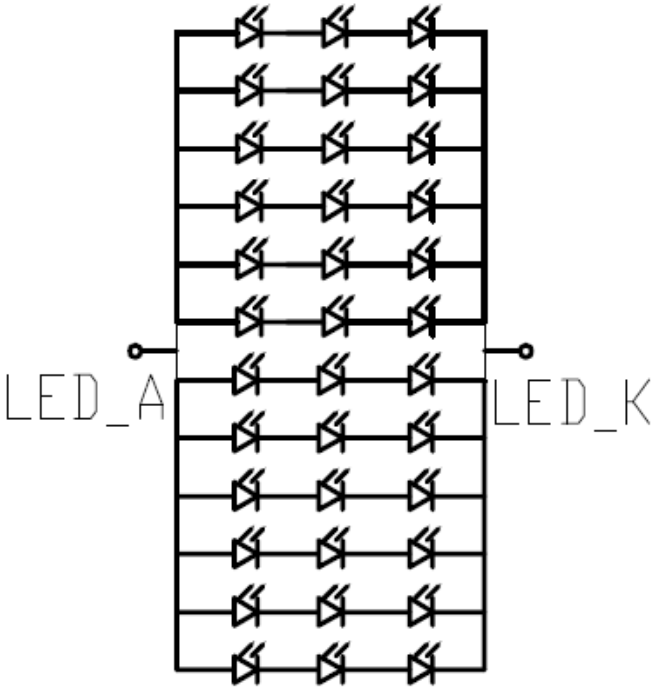

Figure 5.2 LED Backlight Characteristics

5.3 Recommended Power ON/OFF Sequence

Item	Symbol	Min	Typ	Max	Unit	Remark
VCC 3.3V rising time	T1	0	-	20	ms	
VCC to AVDD on time	T2	1	-	-	ms	
AVDD to VGL on time	T3	>0	-	-	ms	
VGL to VGH on time	T4	>2	-	-	ms	
VGH to DATA on time	T5	>0	-	-	ms	
DATA to BL on time	T6	>120	-	-	ms	

Table 5.3 Power ON/OFF Sequence

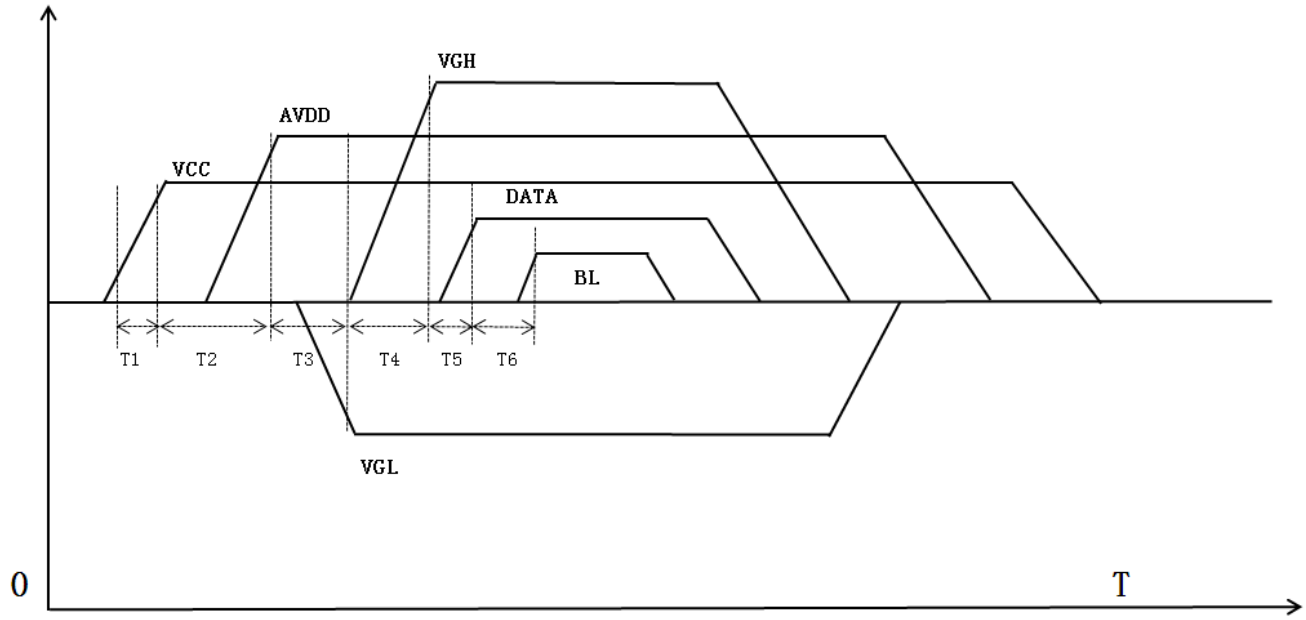

Note:1. Power on sequence: VCC➔AVDD➔VGL➔VGH➔DATA ON➔BACKLIGHT ON
2. Power off sequence: BACKLIGHT OFF➔DATA OFF➔VGH➔VGL➔AVDD➔VCC
3. When VCC turned on, the rising time T1 should less than 20ms.
4. AVDD stable to VCC stable time T2 should better longer than 1 frame time.
5. The power off sequence can be set according to power on settings.
6. It is advised that LCD power turned on much later than system when RGB pin is multiple used for system initial.

5.4 LCD Module Block Diagram

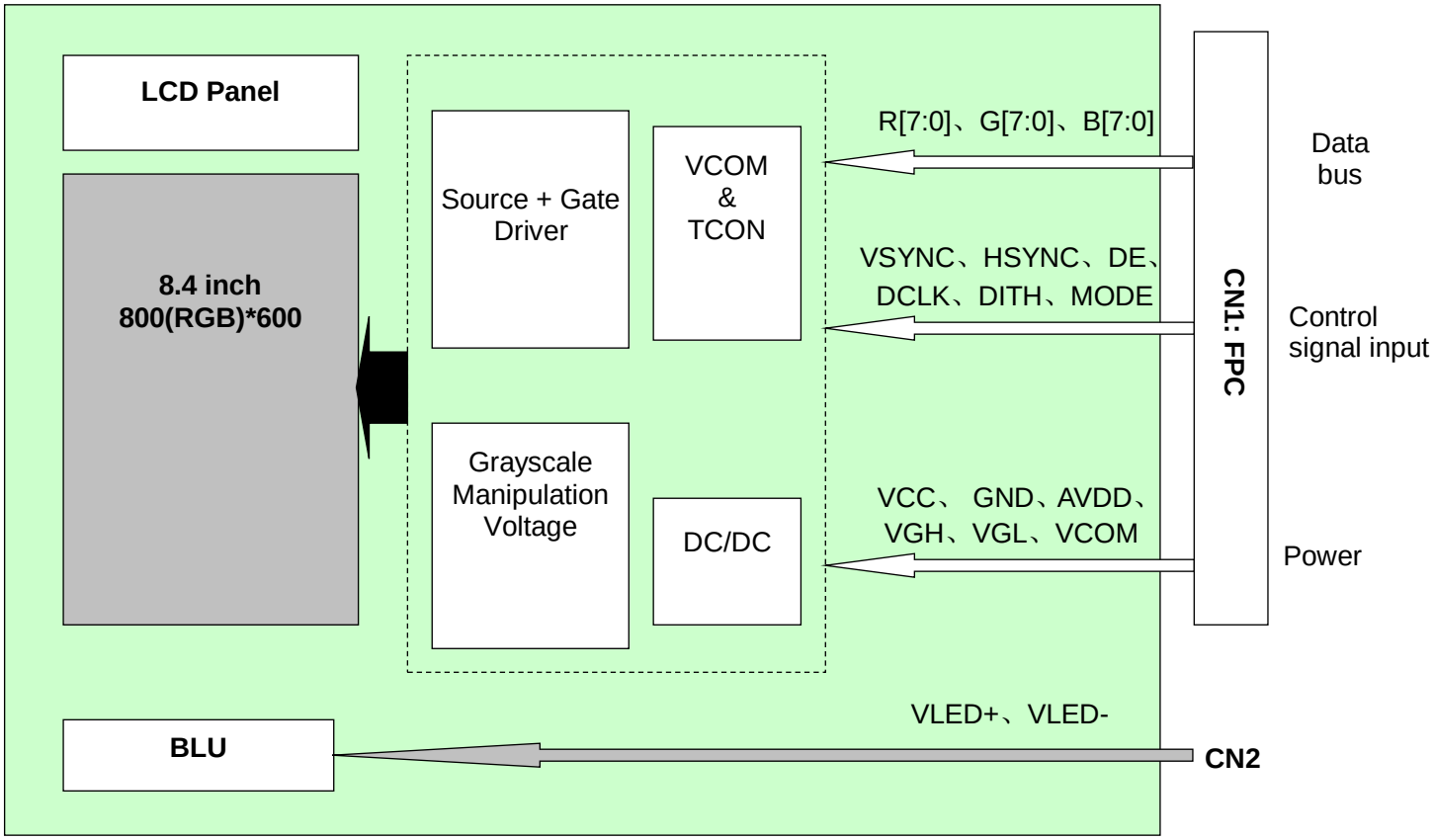

Figure 5.4 LCD Module Block Diagram

6. Interface Timing Characteristics

6.1 AC characteristics

VCC=3.3V, GND=0V, Ta=25℃

Parameter	Symbol	Min	Typ	Max	Unit	Remark
HSYNC Setup Time	T_{hst}	5	-	-	ns	
HSYNC Hold Time	T_{hhd}	5	-	-	ns	
VSYNC Setup Time	T_{vst}	5			ns	
VSYNC Hold Time	T_{vhd}	5	-	-	ns	
Data Setup Time	T_{dsu}	5			ns	
Data Hold Time	T_{dhd}	5	-	-	ns	
DE Setup Time	T_{esu}	5	-	-	ns	
DE Hold Time	T_{ehd}	5	-	-	ns	
CLKIN Cycle Time	T_{cph}	14	-	-	ns	
CLKIN Pulse Width	T_{cwh}	40	50	60	%	
Output stable time	Tsst	-	-	6	us	
VCC Power ON Slew rate	Tpor	-	-	20	ms	From 0V to 90% VCC
RSTB pulse width	TRst	50	-	-	us	

Table 6.1 AC characteristics

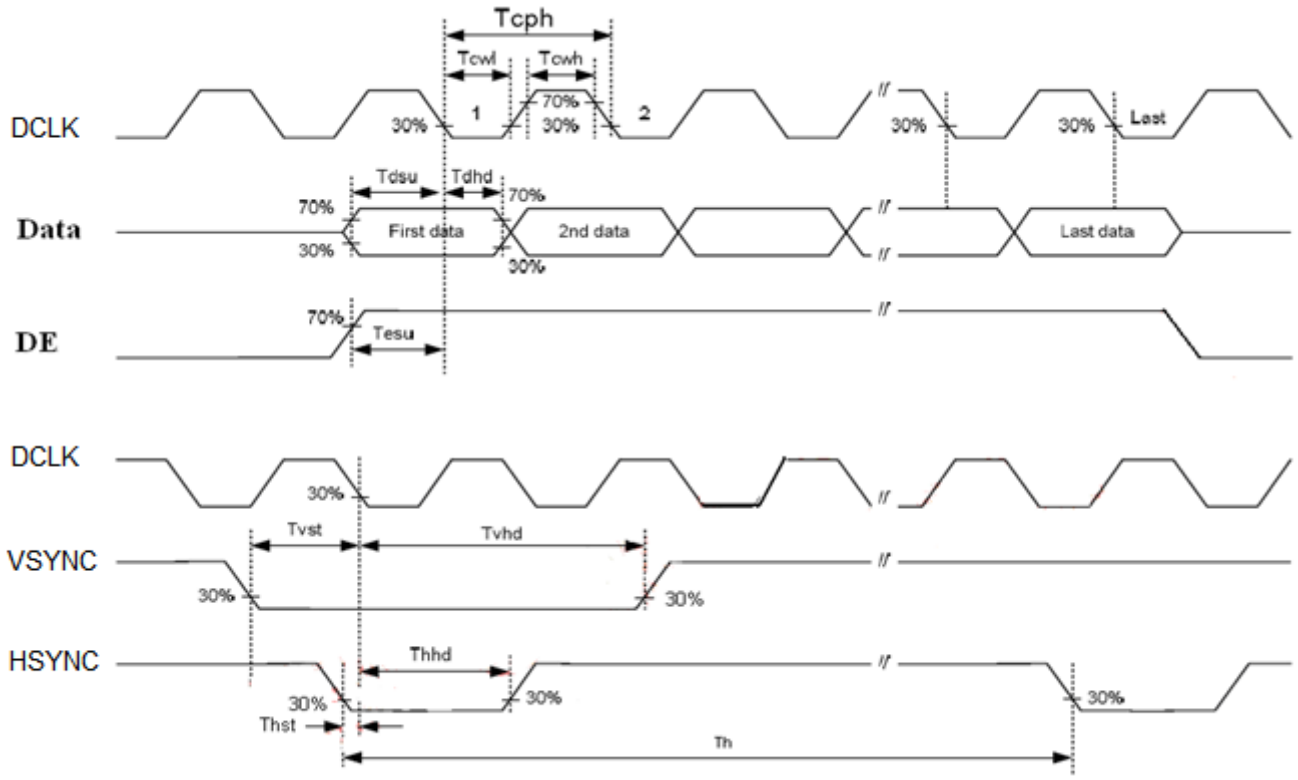

Figure 6.1 AC characteristics

6.2 Data input timing table

i. Input timing at DE mode

VCC=3.3V, GND=0V, Ta=25℃

	Parameter	Symbol	Min.	Typ.	Max.	Unit	Remark
Dclk frequency(Frame rate=60HZ)		Fclk	33.3	39.6	60	MHz	Tclk=1/Fclk
Horizontal section	Horizontal total	TH	910	1000	1300	Tclk	
	Horizontal blanking	THC	110	200	500	Tclk	Note1
	Valid Data Width	THD	-	800	-	Tclk	
Vertical section	Vertical total	TV	610	660	800	TH	
	Vertical blanking	TVC	10	60	200	TH	Note1
	Valid Data Width	TVD	-	600	-	TH	

Table 6.2.1 input timing (DE mode)

ii. Input timing at HV mode

VCC=3.3V, GND=0V, Ta=25℃

	Parameter	Symbol	Min.	Typ.	Max.	Unit	Remark
Dclk frequency(Frame rate=60HZ)		Fclk	34.5	39.6	50	MHz	Tclk=1/Fclk
Horizontal section	Horizontal pulse width	THPW	1	-	40	Tclk	
	Horizontal total	TH	900	1000	1200	Tclk	
	Horizontal back porch	THB	88	88	88	Tclk	
	Horizontal front porch	THFP	12	112	312	Tclk	
	Valid Data Width	THD	-	800	-	Tclk	
Vertical section	Vertical pulse width	TVPW	1	-	20	TH	
	Vertical total	TV	640	660	700	TH	
	Vertical back porch	TVB	39	39	39	TH	
	Vertical front porch	TVFP	1	21	61	TH	
	Valid Data Width	TVD	-	600	-	TH	

Table 6.2.2 input timing (HV mode)

Note1: In HV mode, it is necessary to keep it on typical value.

6.3 Data input timing diagram

i. Vertical Input Timing Diagram

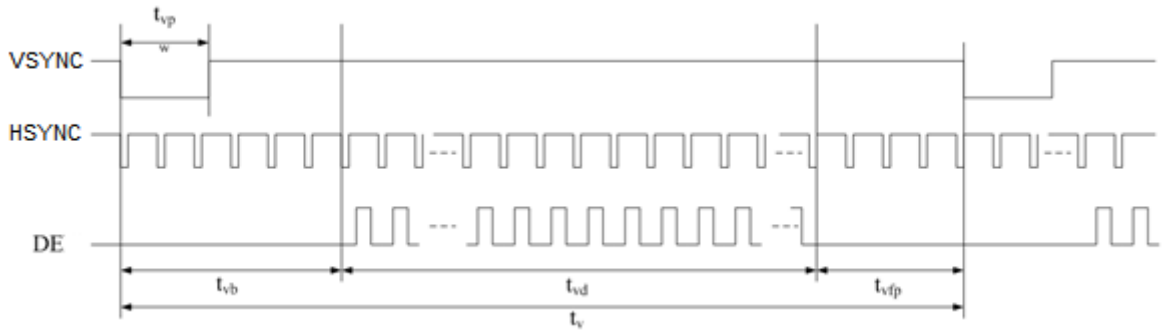

Figure 6.3.1 Vertical Input Timing Diagram

ii. Horizontal Input Timing Diagram

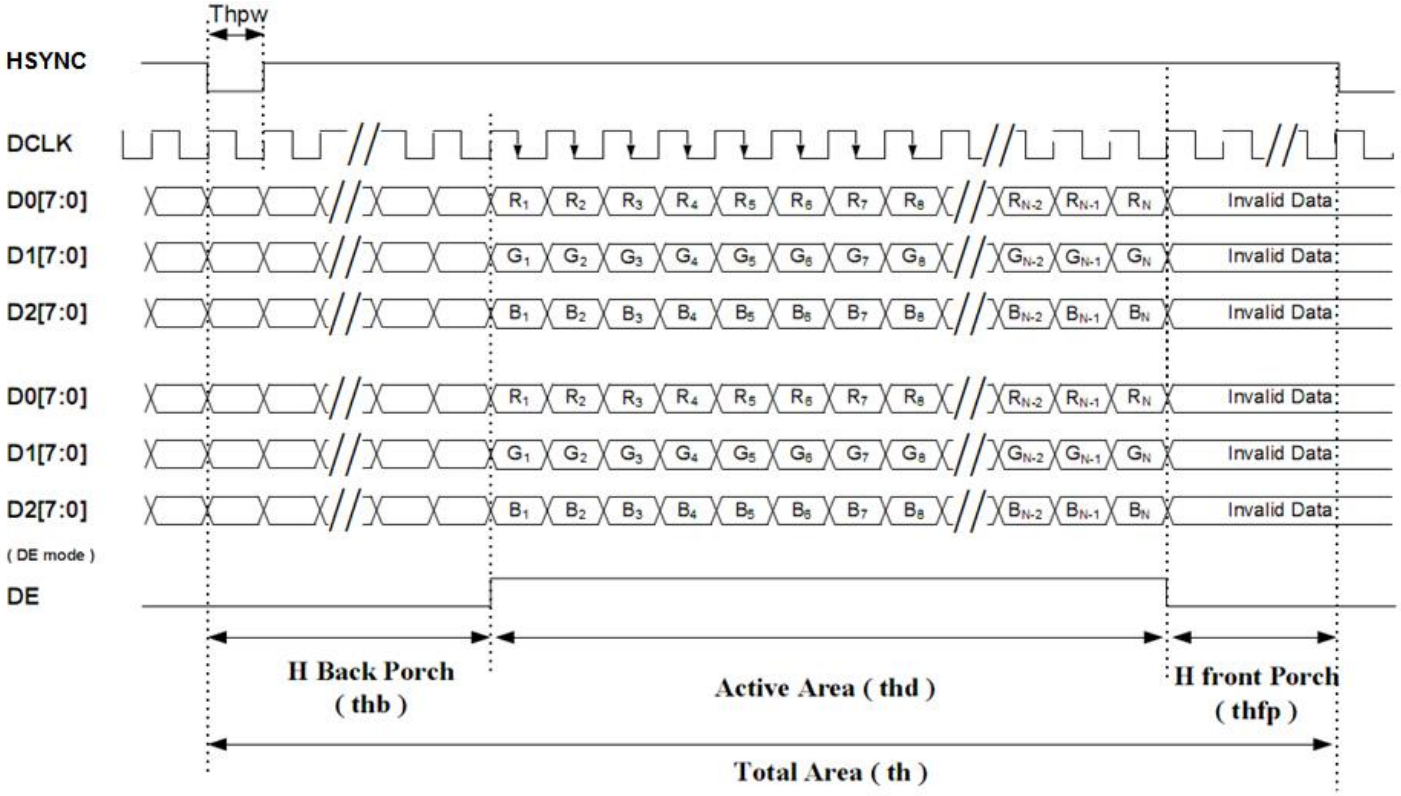

Figure 6.3.2 Vertical Input Timing Diagram

7. Optical Characteristics

Item		Symbol	Condition	Min	Typ	Max	Unit	Remark
View Angles		θT	CR≧10	50	60	-	Degree	Note2,3
		θB		60	70	-		
		θL		60	70	-		
		θR		60	70	-		
Contrast Ratio		CR	θ=0°	400	500			Note 3
Response Time		T_{ON}	25℃	-	25	40	ms	Note 4
		T_{OFF}						
Chromaticity	**White**	x	Backlight is on	0.252	0.302	0.352		Note 1,5
		y		0.269	0.319	0.369		
	Red	x		0.549	0.599	0.649		Note 1,5
		y		0.295	0.345	0.395		
	Green	x		0.278	0.328	0.378		Note 1,5
		y		0.498	0.548	0.598		
	Blue	x		0.102	0.152	0.202		Note 1,5
		y		0.047	0.097	0.147		
Uniformity		U		70	75	-	%	Note 6
NTSC				45	50	-	%	Note 5
Luminance		L		300	350	-	cd/m^2	Note 7

Table 7.1 Optical characteristics

Test Conditions:

1. I_F= 240 mA, and the ambient temperature is 25℃.
2. The test systems refer to Note 1 and Note 2.

Note 1: Definition of optical measurement system.

The optical characteristics should be measured in dark room. After 5 Minutes operation, the optical properties are measured at the center point of the LCD screen. All input terminals LCD panel must be ground when measuring the center area of the panel.

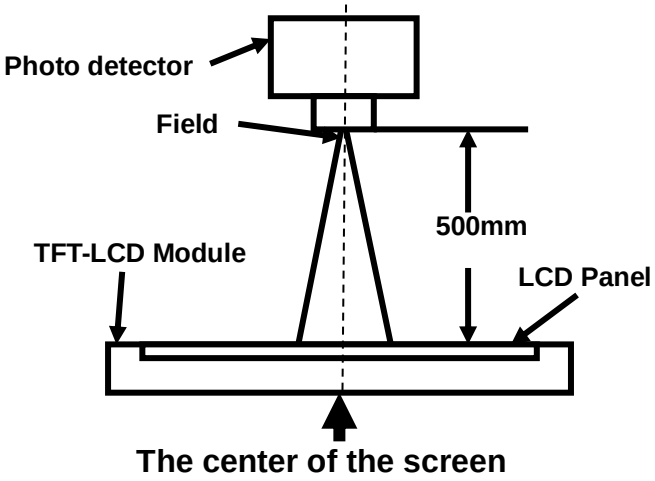

Note 2: Definition of viewing angle range and measurement system.

viewing angle is measured at the center point of the LCD 。

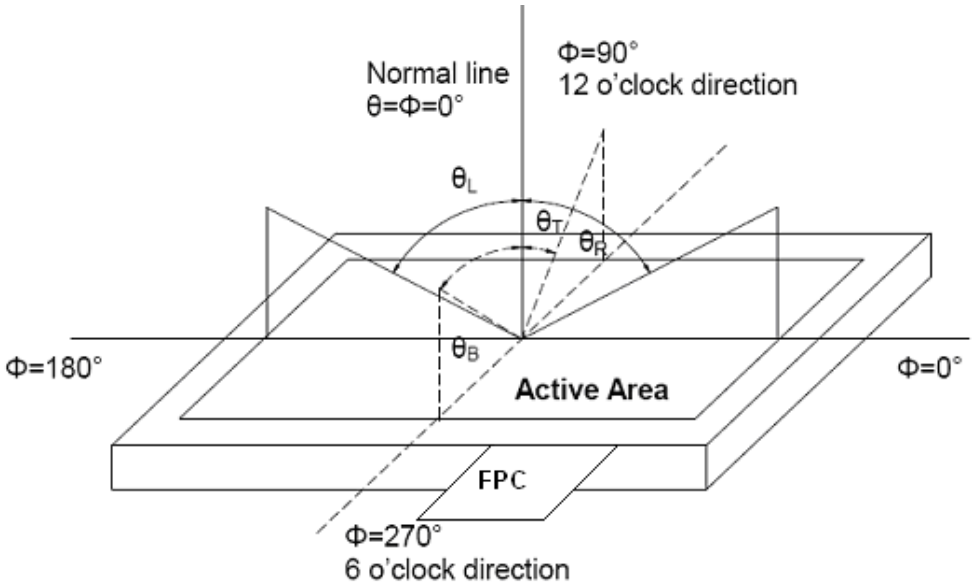

Note 3: Definition of contrast ratio

$$\text{Contrast ratio (CR)} = \frac{\text{Luminance measured when LCD is on the "White" state}}{\text{Luminance measured when LCD is on the "Black" state}}$$

“White state “: The state is that the LCD should drive by Vwhite.

“Black state”: The state is that the LCD should drive by Vblack.

Vwhite: To be determined Vblack: To be determined.

Note 4: Definition of Response time

The response time is defined as the LCD optical switching time interval between “White” state and “Black” state. Rise time (T_{ON}) is the time between photo detector output intensity changed from 90% to 10%. And fall time (T_{OFF}) is the time between photo detector output intensity changed from 10% to 90%.

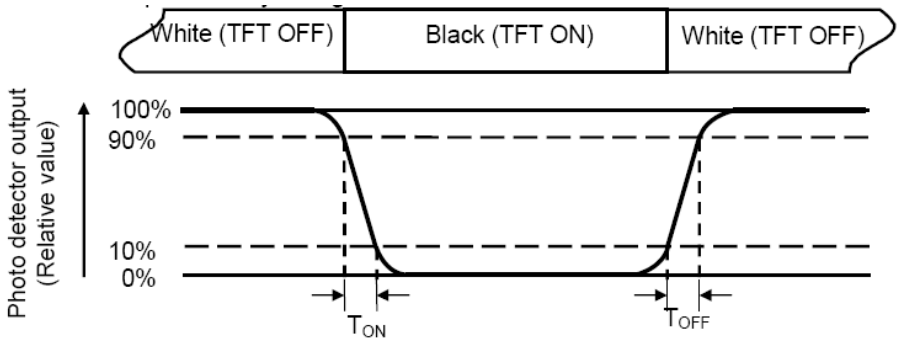

Note 5: Definition of color chromaticity (CIE1931)

Color coordinates measured at center point of LCD.

Note 6: Definition of Luminance Uniformity

Active area is divided into 9 measuring areas (Refer Fig. 2). Every measuring point is placed at the center of each measuring area.

Luminance Uniformity (U) = Lmin/ Lmax

L-------Active area length W----- Active area width

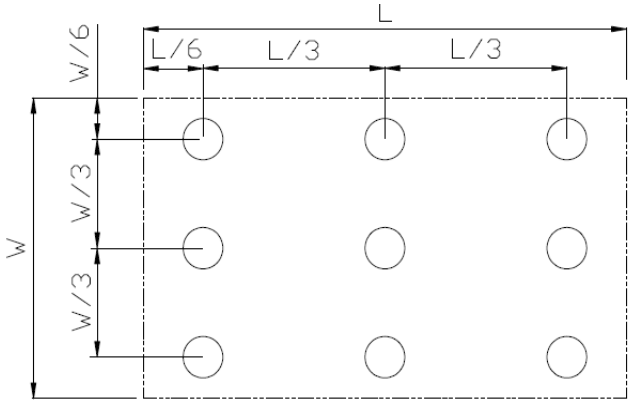

Lmax: The measured Maximum luminance of all measurement position.

Lmin: The measured Minimum luminance of all measurement position.

Note 7: Definition of Luminance:

Measure the luminance of white state at center point.

8. Reliability Test

No	Test Item	Condition	Remark
1	High Temperature Operation	+70℃, 240hrs	Note1 IEC60068-2-1:2007,GB2423.2-2008
2	Low Temperature Operation	-20℃, 240hrs	IEC60068-2-1:2007 GB2423.1-2008
3	High Temperature Storage (non-operation)	+80℃, 240hrs	IEC60068-2-1:2007 GB2423.2-2008
4	Low Temperature Storage (non-operation)	-30℃, 240hrs	IEC60068-2-1:2007 GB2423.1-2008
5	High Temperature & High Humidity Operation	+60℃, 90% RH max, 240 hours	Note2 IEC60068-2-78 :2001 GB/T2423.3—2006
6	Thermal Shock (non-operation)	-30℃ 30 min~+80℃ 30 min, Change time:5min, 100 Cycles	Start with cold temperature, End with high temperature, IEC60068-2-14:1984,GB2423.22-2002
7	Electro Static Discharge (operation)	C=150pF,R=330Ω, Air:±8Kv, Contact:±4Kv, 10times/terminal	IEC61000-4-2:2001 GB/T17626.2-2006
8	Vibration (non-operation)	Frequency range:10～55Hz, Stroke:1.5mm Sweep:10Hz～55Hz～10Hz 2hours for each direction of X.Y.Z (6 hours total)	IEC60068-2-6:1982 GB/T2423.10—1995
9	Shock (non-operation)	60G 6ms, ±X,±Y,±Z 3 times for each direction	IEC60068-2-27:1987 GB/T2423.5—1995
10	Package Drop Test	Height:80 cm,1 corner, 3 edges, 6 surfaces	IEC60068-2-32:1990 GB/T2423.8—1995
11	Package Vibration Test	Frequency： 5-20-200HZ， PSD ： 0.01-0.01-0.001 Total:0.781g2/HZ, x/y/z each direction 30min）	IEC60068-2-34 GB/T2423.11

Table 8.1 Reliability test condition

Note1: Before cosmetic and function test, the product must have enough recovery time, at least 2 hours at room temperature.

Note 2: In the standard condition, there shall be no practical problem that may affect the display function. After the reliability test, the product only guarantees operation, but don't guarantee all of the cosmetic specification.

9. Mechanical Drawing

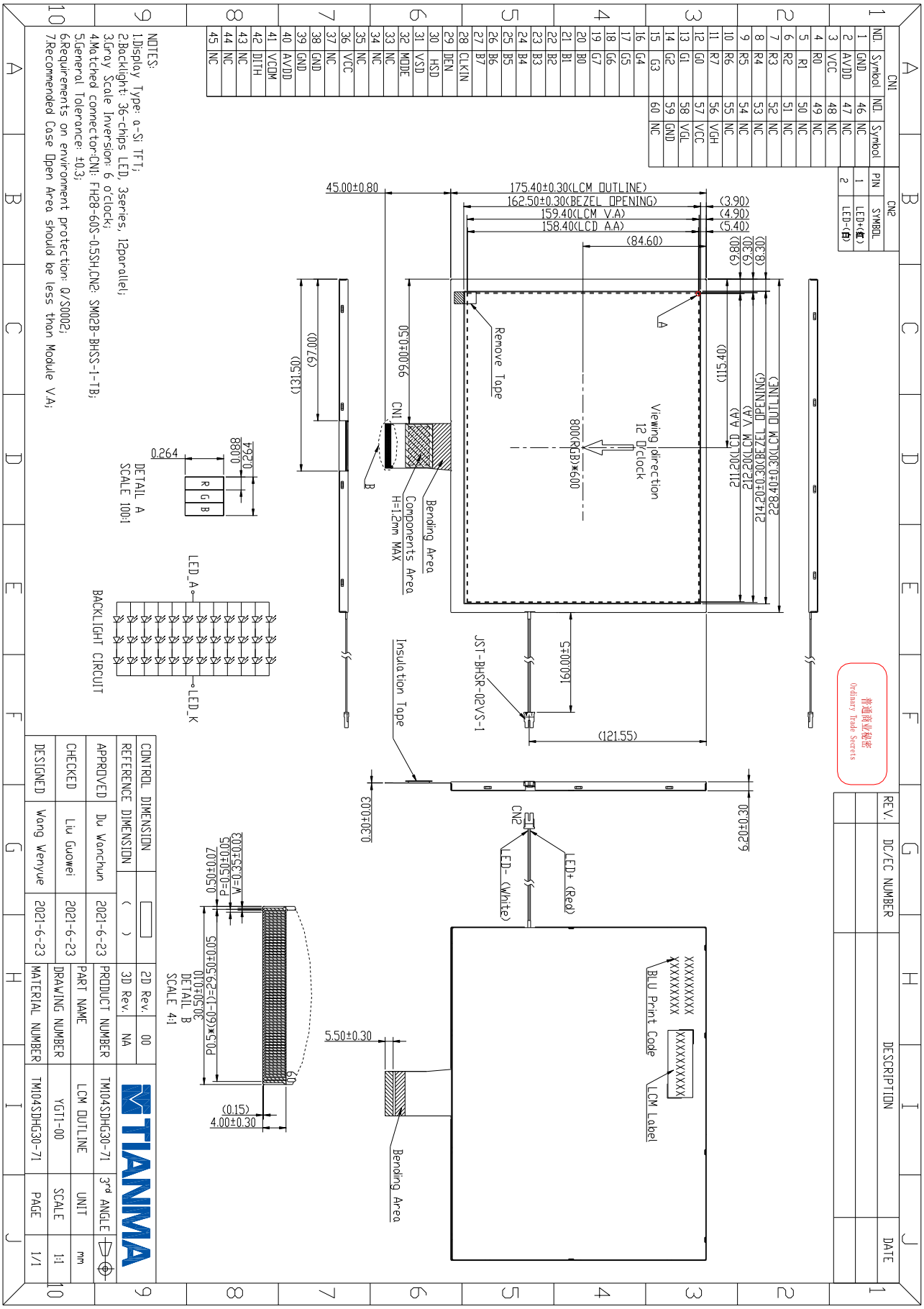

10. Packing Instruction

No.	Item	Model (Material)	Dimensions(mm)	Unit Weight(Kg)	Quantity	Remark
1	LCM module	TM104SDHG30-02	228.40×175.40×6.20	0.341	24	
2	Carton	Corrugated paper	544×365×250	1.01	1	
3	Tray	PET	485×330×19.2	0.227	15	
4	Beauty-grain	PE	28×10	0.001	24	
5	Dust-Proof Bag	LD-PE	700×545x0.05	0.046	1	
6	Label	Tagboard	100×52	0.002	1	
7	Box	Corrugated paper	520×345×74	0.44	3	
8	Total weight	(13.99±5%) kg				

Table10.1 Packing instruction

The detail of packing method is shown as below:

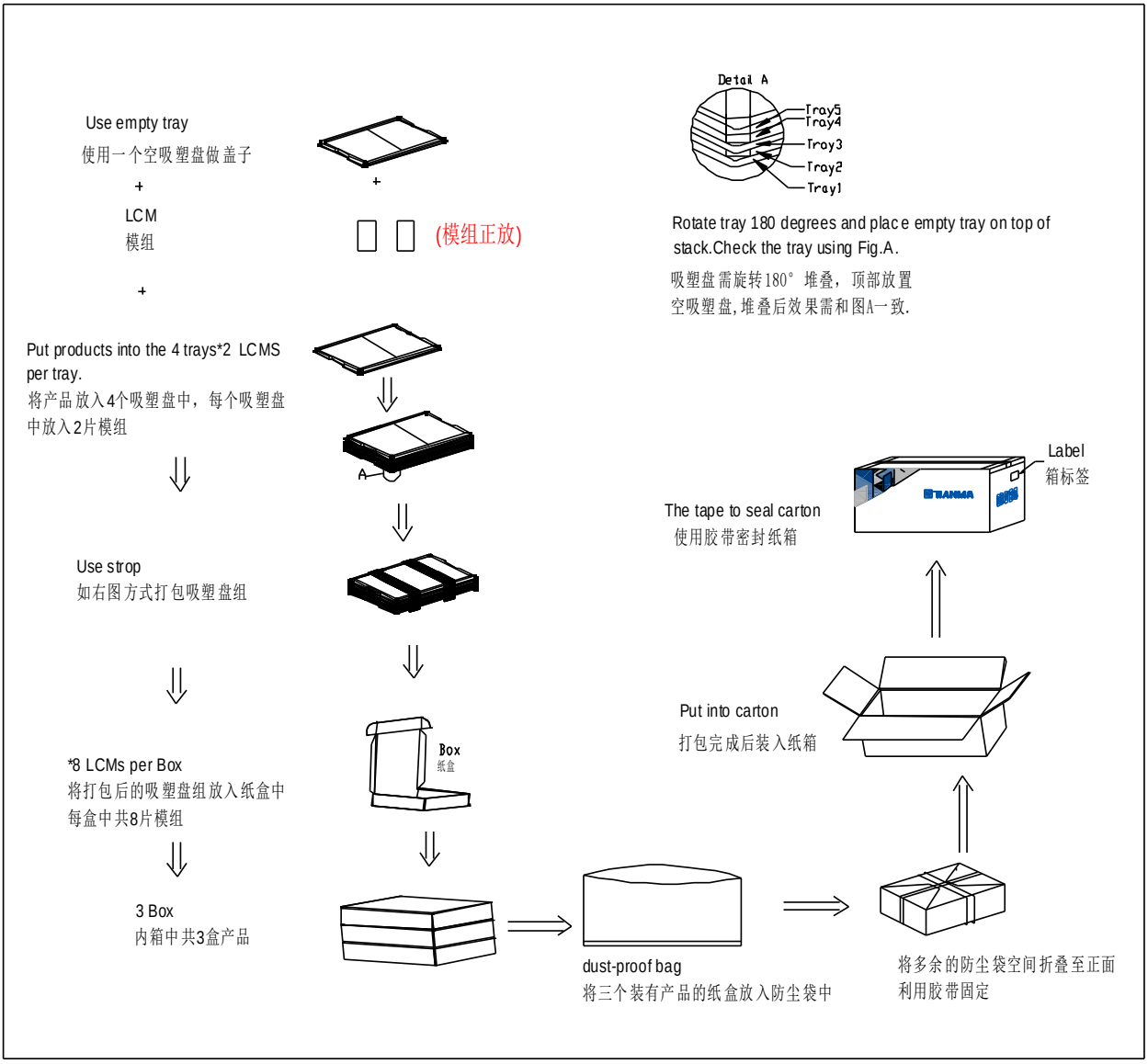

Figure10.1 Packing instruction

11 Precautions for Use of LCD Modules

11.1 Handling Precautions

11.1.1 The display panel is made of glass. Do not subject it to a mechanical shock by dropping it from a high place, etc.

11.1.2 If the display panel is damaged and the liquid crystal substance inside it leaks out, be sure not to get any in your mouth, if the substance comes into contact with your skin or clothes, promptly wash it off using soap and water.

11.1.3 Do not apply excessive force to the display surface or the adjoining areas since this may cause the color tone to vary.

11.1.4 The polarizer covering the display surface of the LCD module is soft and easily scratched. Handle this polarizer carefully.

11.1.5 If the display surface is contaMinated, breathe on the surface and gently wipe it with a soft dry cloth. If still not completely clear, moisten cloth with one of the following solvents:

- Isopropyl alcohol
- Ethyl alcohol

Solvents other than those mentioned above may damage the polarizer. Especially, do not use the following:

- Water
- Ketone
- Aromatic solvents

11.1.6 Do not attempt to disassemble the LCD Module.

11.1.7 If the logic circuit power is off, do not apply the input signals.

11.1.8 To prevent destruction of the elements by static electricity, be careful to maintain an optimum work environment.

10.1.8.1 Be sure to ground the body when handling the LCD Modules.

10.1.8.2 Tools required for assembly, such as soldering irons, must be properly ground.

10.1.8.3 To reduce the amount of static electricity generated, do not conduct assembly and other work under dry conditions.

10.1.8.4 The LCD Module is coated with a film to protect the display surface. Be care when peeling off this protective film since static electricity may be generated.

11.2 Storage precautions

11.2.6 When storing the LCD modules, avoid exposure to direct sunlight or to the light of fluorescent lamps.

11.2.7 The LCD modules should be stored under the storage temperature range. If the LCD modules will be stored for a long time, the recommend condition is:

Temperature : 0℃ ～ 40℃ Relatively humidity: ≤80%

11.2.8 The LCD modules should be stored in the room without acid, alkali and harmful gas.

11.3 Transportation Precautions

11.3.6 The LCD modules should be no falling and violent shocking during transportation, and also should avoid excessive press, water, damp and sunshine.

11.4 Do not display the fixed pattern for a long time because it may cause image sticking. Use a screen saver, if the fixed pattern is displayed on the screen

11.5 SAFETY PRECAUTIONS

a. When you waste damaged or unnecessary LCDs, it is recommended to crush LCDs into pieces a nd wash them off with solvents such as acetone and ethanol, which should later be burned.

b. If any liquid leaks out of a damaged glass cell and comes in contact with the hands, wash off thor oughly with soap and water.

c. Be sure to turn off the power supply when inserting or disconnecting the LED backlight cable.

d. LED driver should be designed carefully to limit or stop its function when over current is detected on the LED.

11.6 screen saver

Not display the fixed pattern for a long time because it may cause image sticking. Use a screen saver, if the fixed pattern is displayed on the screen